CENTURYWISE LTD

OWNERS MANUAL

PORTABLE ABRASIVE BLASTING UNIT

MODEL : CW20A

UNIT 2, HNG HOUSE, STUART ROAD, BREDBURY
STOCKPORT, CHESHIRE, SK6 2SR
TEL : 0161 494 6801, FAX : 0870 123 1542

Revision 4 : January 2012

3/4" AIR HOSE

" AIR HOSE

HELMET FILTER

1/4" HELMET LINE

BLAST HOSE
GREEN + YELLOW
REMOTE LINES

NOZZLE +
DEAD-MANS
HANDLE

CENTURYWISE LTD
0161 494 6801
07774 160005

WARNINGS

When using Centurywise portable abrasive blasting equipment -

1) The maximum recommended working pressure of this machine is 110 psi/ 8 bar. Never connect the machine to an air supply in excess of this pressure rating. However, a minimum inlet pressure of 5 bar / 75 psi is required to active the remote control valve.

2) Never attempt to wheel the machine over rough or uneven ground as there is a danger of the machine falling over and injuring the operator.

3) When lifting the machine always use the lifting lugs provided. Do not lift using other parts of the machine i.e. handle or remote valve.

4) Always disconnect all hoses before attempting to move the machine and ensure the machine is empty of abrasive.

5) Always ensure control hoses are connected the right way around.

6) Always ensure that the hand hole is tightly fastened and does not leak.

7) Internal type hose couplings or nozzles designed to locate inside the blast hose are dangerous and must not be used.

8) Always check all air hose and blast hose connections are secure as loose or leaking hoses are a safety hazard.

9) Blasting operations can generate noise levels which can be damaging to the ears. It is essential that the operator, pot tender and other persons in the area are warned and wear suitable ear defenders.

10) Abrasive ricochet and dust levels generated by blasting can also be dangerous. Suitable protection equipment must be worn. Operator protection standards must take into consideration the composition coatings to be removed to determine their toxicity, as well as type of abrasive being used.

11) When operating blasting equipment precautions must be taken by signs or otherwise to prevent unauthorised access to the blasting area. Should unauthorised persons enter, the machine must be stopped by either the deadman handle or via the machine stop.

12) It is essential that clean air and adequate volume is supplied to the air fed helmet prior to operation. It is important to note that no filters can remove carbon monoxide from the air supply. Never position mobile air compressor where there is any chance of exhaust fumes entering the breathing air supply. Failure to site the compressor in an open space can cause operators to breath fumes and suffer from potentially serious carbon monoxide poisoning.

13) A back thrust is created by the action of the compressed air passing through the nozzle. Always ensure that the operator has a safe stance and firm hold of the blast hose/ nozzle holder prior to operation.

14) Never place hands or fingers near the pip up valve/ filling orifice of the machine. Always depressurise unit before performing any maintenance or loading of abrasive is performed.

15) Always keep clear of the exhaust from the remote control valve, as sudden release of pressure can be dangerous.

16) When purging the machine by closing the choke or if the abrasive metering valve is opened fully severe surging can occur in the blast hose and cause a potentially dangerous situation.

17) Always ensure when shutting down the machine and before performing any maintenance that the air supply to the machine is turned off. Precautions should be taken to prevent any accidental turning on of the air supply.

18) Consult the health and safety data on all abrasives prior to use.

Operating and Maintenance Instructions

Setting up Instructions

1) Locate the blast machine in a stable position on level ground.

2) Ensure the machine is adequately earthed if required by local regulations by connecting a suitable earthing strap to the machine leg.

3) Close the abrasive metering valve.

4) Open the choke valve by positioning the handle in line with the valve body. This valve should remain in the open position for all normal operations.

5) Open the safety stop petcock on the remote control valve by positioning the handle in line with the petcock body.

6) Securely connect the remote line / twinline hoses to their respective couplings. Usually red / green to the lower connection on the remote valve and the inlet on the deadman handle. The yellow line fits to the top connection on the remote valve and to the return from the deadman handle. Most types of deadman are fitted with a restrictor to reduce the amount of air escaping. The feed from the remote valve should always go to the restricted side of the deadman.

7) Check that the sealing ring in the abrasive filling orifice is in good condition and correctly positioned.

8) Check the pop-up valve is in position and in good condition.

9) Check that the inspection hatch / door assembly is securely bolted in position and that the gasket is in good condition, correctly seated in the coupling and in place.

10) Check that the blast hose coupling gasket in the pot coupling at the base of the machine is in good condition and correctly seated in the coupling.

11) Check the blast hose to be used in in good condition along its entire length/s.

12) Ensure that the blast hose ends are cut square and are located fully into the coupling and the nozzle holder and up to the retaining shoulders within and that all the required hose retaining screws are in good condition and firmly in place.

13) Check that all the hose coupling gaskets are in good condition, properly seated and secure. Connect the first length of the blast hose to the pot coupling at the base of the machine and ensure that each coupling is secured with a latching wire located through the hole in the marrying coupling. If no integral means of wire latching is provided, use split pins through the corresponding holes to ensure that no accidental parting of the couplings can occur.

14) Lay out the blast hose from the machine to the work area, ensuring no tight curves or kinks occur. Ensure that the hose is protected from damage by any passing traffic/ forklifts etc. Check that the deadman is in good condition and operates freely.

15) Select a suitable nozzle and check that it is in good condition and has no internal blockage. Insert a new nozzle gasket into the seat of the nozzle holder and screw the nozzle into the holder until it is fully hand tight down on to the gasket.

16) Ensure the deadman is in the open position on top of the machine.

17) Check that a sieve or cover is safely in position on top of the machine.

18) Start and operate the compressor according to the manufacturer's instructions.

19) Ensure that the compressed air valve on the compressor is closed and connect a suitable length of approved compressed air supply hose to the outlet valve, first ensuring that the required couplings and gaskets are in good condition.

20) Ensure that the connection is tightly secured.

21) Take secure hold of the free end of the air supply hose, direct into a safe area and carefully slightly open the outlet valve to expel and dirt and / or moisture from the hose.

22) Turn off the compressor outlet valve.

23) Connect the coupling at the free end of the air supply to the blast machine inlet. Ensuring all gaskets are in good condition. Check the connection is tightly secured.

24) Refer to the helmet manufacturer's owner's manual and connect the helmet to the breathing air supply. A petcock / ball valve is provided on the remote control valve for a ¼ " air feed should this be required. It is best to use a separate supply from the compressor with a breathing air filter.

25) Open the drain on the bottom of the water separator to allow condensation to escape. Leave open very slightly during blasting operations.

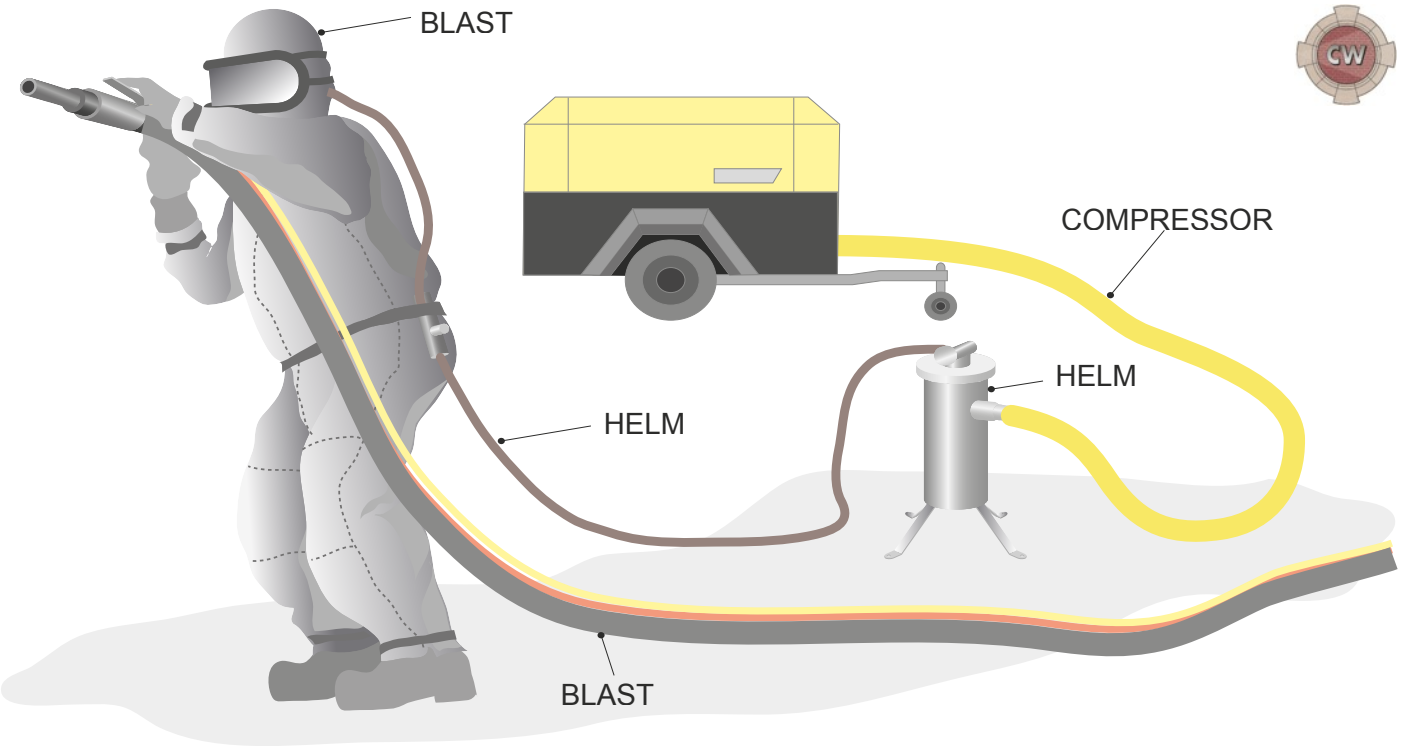

Operating Instructions

1) Having carried out the setting up instructions, prior to the initial loading with abrasive, turn on the compressed air supply to the machine at the compressed air supply outlet valve.

2) Adjust the drain cock on the water separator to give a constant slight bleed off of air - water vapour.

3) Turn on the breathing air supply to the helmet.

4) Ensure that the breathing air supply hose is adequately protected to prevent it becoming accidentally trapped, nipped or broken.

5) Position danger warning signs around the operation and outside the perimeter of excessive noise levels and abrasive ricochet and dust fall out.

6) The blasting operator must now don protective clothing, sturdy garments, ear defenders and air fed helmet.

7) Ensure all personnel within the vicinity are adequately protected.

8) Close the petcock/ machine stop on the remote control valve by turning the handle at right angles to the petcock valve body.

9) The operator must first check that no one has entered the marked area of operation and then firmly take a secure hold of the nozzle holder and blast hose, at all times directing the hose at the work surface.

10) Close the deadman handle and compressed air will pass through the nozzle.

11) Release the deadman handle and air will cease to pass through the nozzle.

Filling the Blast Machine with Abrasive ready for Operation

1) Open the petcock/ machine stop on the remote control valve by turning the handle in line with the valve.

2) Check that the abrasive metering valve is closed.

3) Ensure that the safety sieve is securely in position.

4) Load the selected material into the machine through the sieve. This will flow into the machine through the filling orifice in the centre of the concave dish. Never overfill the machine as this can cause problems with the seal of the pop-up.

5) Never place your hands near the pop-up valve whilst the machine is connected to a compressed air supply.

6) Fit the pot cover to the top of the machine.

7) Close the petcock / machine stop on the remote control valve by turning the handle at right angles to the petcock body.

N.B. IN EMERGENCIES THE OPENING OF THE PETCOCK / MACHINE STOP WILL DEPRESSURISE THE MACHINE AND HALT AIR FLOW TO THE NOZZLE.

8) The operator should then ensure that no one is in the vicinity of the work area and take secure gold of the nozzle holder and blast hose and direct the nozzle at the work surface.

9) Close the deadman handle and the machine will pressurise and air will pass to the nozzle.

10) The pot tender should gradually open the abrasive metering valve to introduce abrasive into the air stream. Adjust the valve to maintain the minimum of abrasive into the air stream.

11) To stop the blasting operation the operator releases the lever on the deadman handle or the pot tender can open the petcock / machine stop on the remote control valve.

N.B. If the machine is not to be used for some time, then the machine should be emptied of abrasives to prevent unnecessary blockages due to condensation.

Shut Down Procedure

1) Open the petcock / machine stop on the remote control valve.

2) Ensure the operator has first removed his air fed helmet, then turn off the compressed air supply at the outlet valve.

3) Ensure that all lines are empty of pressure before disconnecting hoses.

Maintenance

All blast cleaning equipment is subject to abrasive wear, therefore it is essential to operate a preventative maintenance programme. The degree of wear is variable and is dependant upon many factors - type and grade of abrasive, blasting pressure, nozzle size, operator expertise etc - these factors should be taken into consideration when planning regular maintenance schedules. The following checklists are a basic guide to assist in planning maintenance programmes.

N. B. Ensure that the machine is disconnected from the compressed air supply before commencing any maintenance procedures.

Maintenance Check List - Setting Up and after Four Hours Use.

1) Check condition of all the air hoses, connections and gaskets for signs of wear and replace as necessary.

2) Check condition of pop-up 'O' ring. Replace if there are signs of wear.

3) Check condition of the safety sieve and replace if worn or damaged.

4) Check the condition of the pop-up valve and replace if there is any sign of wear.

5) Check the condition of the exhaust manifold and silencer and exhaust pipe work and replace if necessary.

6) Check condition of silencer core and replace if worn or blocked.

7) Check condition of water separator, check drain and filter.

8) Check blast hose for signs of wear or damage and replace with new if required.

9) Check the blast hose couplings and gaskets for signs of wear and replace if necessary. Ensure that all retaining screws are in good condition and in place.

10) check that all blast hose connections are securely fastened and that the latching wires are correctly located in the holes of the marring coupling or that split pins are in position in the marrying holes.

11) Check the condition of the nozzle holder for wear and replace with a new one if necessary.

12) Check that the nozzle holder gasket is in good condition and ensure that it is in good position. Replace with new if it shows signs of wear.

13) Check the nozzle for blockages, wear or damage and replace with a new one if necessary.

14) Ensure the nozzle is securely located into the nozzle holder onto the gasket.

15) Check the deadman handle to ensure free spring lever action and check that the rubber button is in place.

16) Check the abrasive metering valve for signs of wear/ leaks and replace if necessary.

17) Check the inspection door assembly is fitted correctly and that the gasket is in position and no leaks occur.

Maintenance Check List - After 40 Hours

1) Remove inspection door assembly and check condition of components for wear. Replace worn items.

2) Clean out the machine, remove any foreign objects and oversize particle and check the interior for deterioration.

3) Remove the pop-up valve and check for wear. Replace with new parts if necessary.

4) Remove the pop-up 'O' ring from its seat and check the seat for wear and/ or build up of contamination. Clean out if contaminated. If corrosion to the seat is evident contact the manufacturer immediately.

5) Check the condition of the pop-up 'O' ring for wear, replace with new if necessary and refit into the sealing ring seat.

6) Refit the inspection door assembly correctly and securely to ensure a good seal, ensuring the gasket is in good condition.

7) Check the abrasive metering valve and adjust fittings for wear. Replace with new parts if worn.

8) Check the pot coupling and gasket for wear ad replace with new if required.

Maintenance List - After 160 Hours

1) Check all fittings and threads for wear or damage and replace as required.

2) Thoroughly check the vessel internally and externally for corrosion, damage and abrasive wear. Should there be any such evidence the vessel should be repaired/ re-pressure tested by a component vessel repairer or manufacturer.

Fault Analysis

A: No air or abrasive passes through the nozzle:

1) Check that the compressor is turned on.
2) Check that the rubber insert on the deadman handle has not been lost. Replace if necessary.
3) The water separator is blocked. Check and clean if necessary.
4) Remote control valve is not working. Check that the petcock / machine stop is in the closed position.
5) Check the remote control / twin lines for loose connections or leaks.
6) Foreign objects blocking the nozzle. Remove and check but beware there may be build up of pressure in the blast hose. Depressurise total system before checking.

B: Air but no abrasive passes through the nozzle.

1) Check that the abrasive metering valve is open.
2) Damp or large objects restricting flow at the base of the cone. Quickly close and open the choke valve. If this fails clean out the inside of the vessel.
3) There is an air leak from the pop-up assembly, handhole or other area causing the pressure above the metering valve tee to be lower than the pressure below which prevents the abrasive falling through the valve.

C: Intermittent Flow of Abrasive.

1) Faults as for B:
2) Abrasive valves not set correctly.
3) Machine supplied by wet source of compressed air.

D: Abrasive Surges from the Nozzle.

1) Abrasive metering valve set too far open. Close gradually until the correct setting reached.
2) Choke valve is not fully open. Ensure the handle is set in the same direction as the valve/ flow of the air.

E: Pop-up valve will not remain seated against the sealing 'O' ring:

1) Insufficient volume of pressure of air. Check that the air supply is sufficient for the nozzle used. Check compressor is operating correctly.
2) Close the choke valve, if the pop-up valve then seals then insufficient air is available.
3) Check condition of filter in water separator for blockages.
4) Check operation of remote valve.

F: Pop-up valve will not drop after depressurisation.

1) The pop-up valve and/ or sealing ring may be worn. Inspect and replace if necessary.
2) Abrasive trapped in vertical pipe work. Strip and clean out.
3) Exhaust system not working. Exhaust may be blocked with abrasive. Strip and renew silencer core if necessary.

G: Machine will not depressurise.

1) Check for blockages in deadmans handle or lines.
2) If it still does not depressurise or turn off after opening the petcock/ machine stop on the remote control valve, remove and repair the remote control valve.

CENTURYWISE CW20A BLAST POT

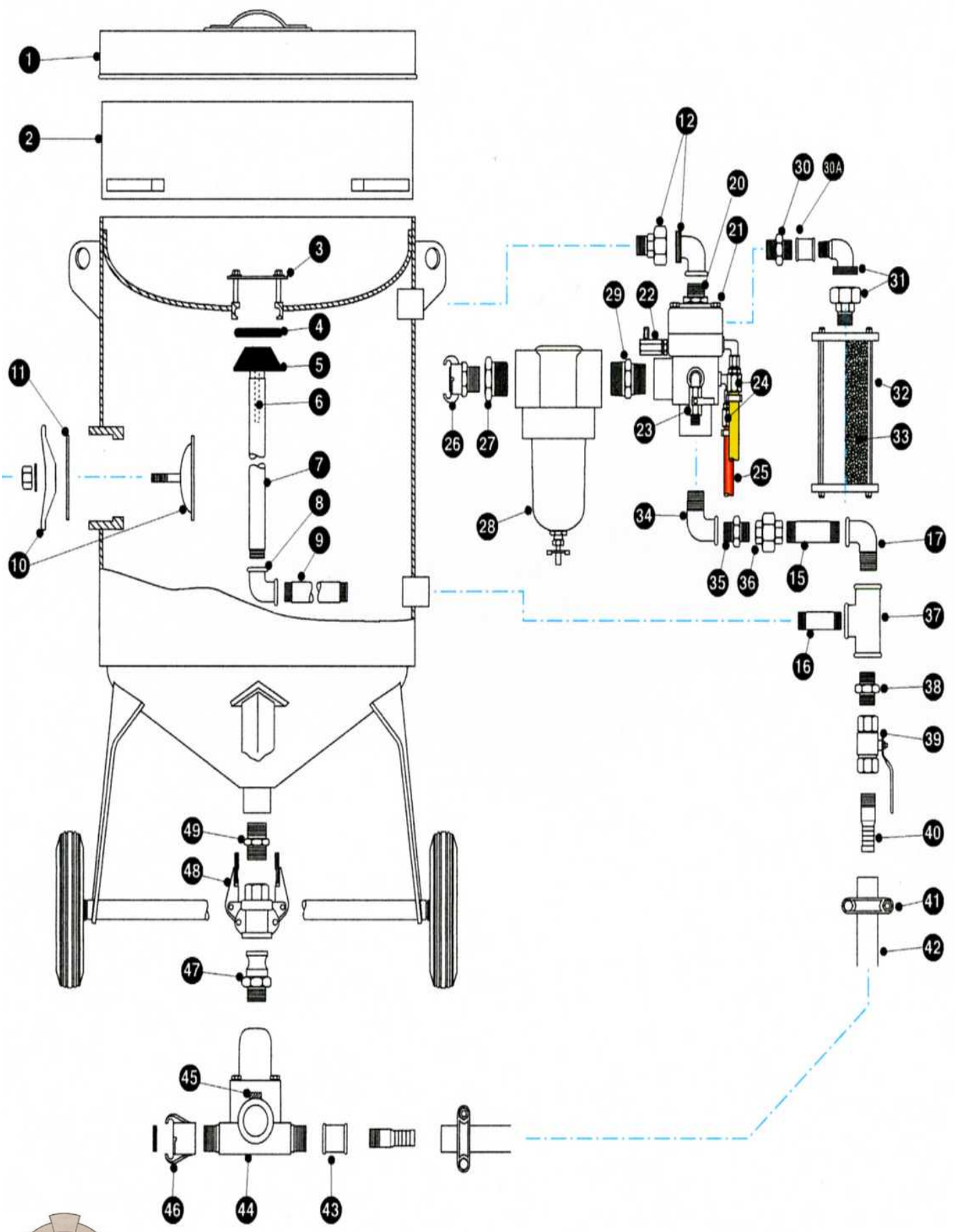

Centurywise Ltd., Unit 2, HNG House,
Stuart Road, Bredbury, Stockport, SK6 2SR
Tel : 0161 494 6801, Fax : 0870 123 1542

CENTURYWISE CW20A POT PARTS

DESCRIPTION	CW20A	NOTES
Pot lid	CW771	
Sieve lid	CW670	
Pot-fill safety plate	CW675	
Pop-up 'O' ring	CW618	
Pop-up valve c/w stem	CW616	
Pop-up valve stem	CW617	
Inner barrel : 1" x 180mm	PW611	Cut down to 165mm
Female equal elbow : 1"	PW535	
Inner barrel :1" x 250mm	PW612	Cut down to 220mm
Inspection door 8" x 6"	CW612	
Inspection door seal	CW614	
M/F Union elbow : 3/4"	PW588	
Barrel nipple : 1.1/4" x 120mm	PW615	
Barrel nipple : 1" x 50mm	PW609	
M/F elbow : 1.1/4"	PW550	
Equal nipple : 3/4	PW502	
Compact remote valve	CW759	
Mini ball valve : 1/4" end-off	CW773	
Mini ball valve : 1/4"	CW773	
M/F elbow : 1/4"	MS141	
Twin remote lines	CW812/3	
Claw coupling : 1"M thread	CW918	
Bush : 1.1/2"M x 1"F	PW570	
Water separator	CW678	
Nipple :1.1/2" x 1.1/4"	PW509	
Equal nipple : 3/4"	PW502	
Socket equal: 3/4"	PW517	
Union elbow : 3/4" M/M	PW589	
Remote valve silencer	CW774	
Silencer mesh	CW772	
M/F elbow : 1.1/4"	PW550	
Equal nipple : 1.1/4"	PW508	
Female union 1.1/4"	PW576	
Tee : 1.1/4"F x 1"F x 1.1/4"F	PW597	
Equal nipple : 1.1/4"	PW508	
Ball valve : 1.1/4"	CW610	
Hose tail : 1.1/4"	CW633	
Hose clamp : SL44	CW635	
Blast hose : 1.1/4"id x 50cm	CW823	
Socket equal : 1.1/4"	PW523	
Minor grit valve	CW685	
Urethane sleeve	CW687	
Pot coupling : 1.1/4" F	CW637	
Camlock 1.1/4" MM	CW909	
Camlock 1.1/4" FF	CW908	
Male equal nipple : 1.1/4"	PW508	

CENTURYWISE COMPACT REMOTE VALVE

The Centurywise CW759 Compact remote control valve is an air operated inlet/outlet valve utilized to control the supply of compressed air into the blast pot. in its un-activated or closed position, the valve shuts off the compressed air supply to the blast pot, and simultaneously opens the pots' outlet port to release any compressed air contained in the blast pot.

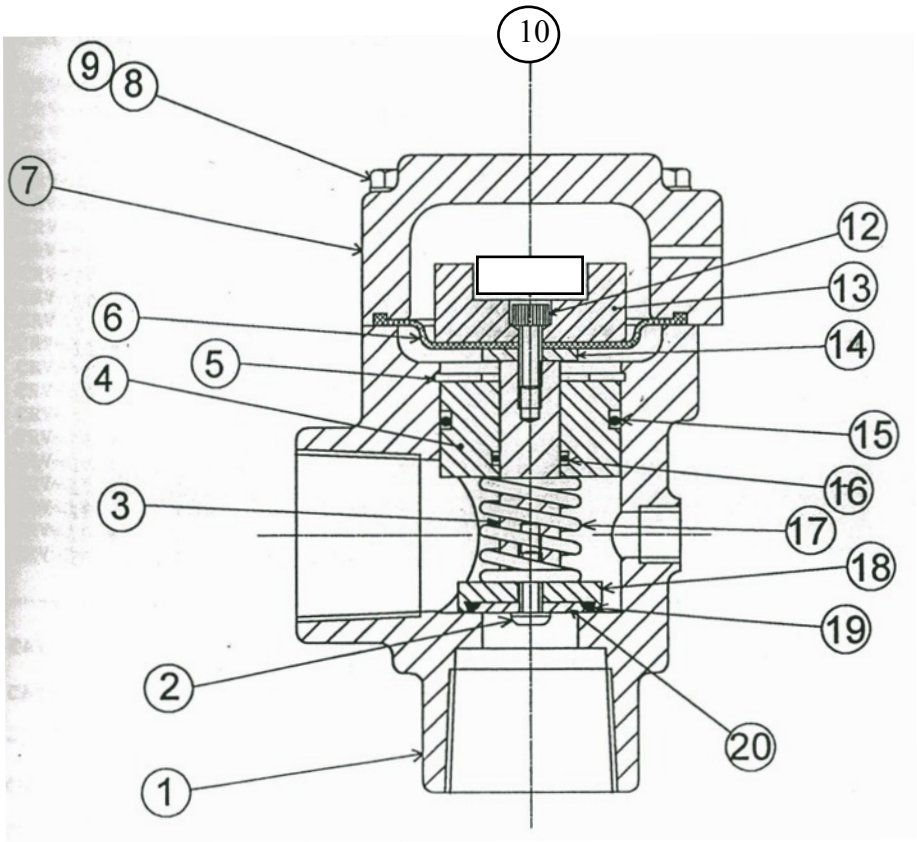

No.	Code	Description
1	CW759	CRV complete
2		M6 x 20mm bolt
3		Inlet port
4		Bush
5		Int circlip 48mm
6	CW766	Diaphragm
7		Exhaust chamber
8		M8 x 50 Hex bolt
9		M8 Flat washer
10	CW763	Exhaust pad
12		M6 x 20 bolt
13	CW762	Piston
14	CW764	Backing washer
15		O ring 41mm
16		O ring 15mm
17		Spring
18		Piston end cap
19		O ring 28mm
20		Retaining disk
	CW760	Service kit : Items 6,10, 15, 16, & 20

Operation of the Compact remote valve is via a pilot air signal from the operator depressing the Remote control handle.

Upon receiving a pilot air signal from the depressed Handle, the CRV will instantaneously open, thus permitting the pot to pressurize and supply compressed air to the blast hose. Simultaneously, the CRV closes the pot outlet port, thus sealing the blast pot.

The Centurywise compact remote valve is a normally closed style valve, utilizing a spring to seal during its un-activated closed state. Being a one piece design, the CRV is easy to install onto existing equipment and is easily accessible for maintenance, without requiring removal from the blast pot.

Centurywise Ltd., Unit 2, HNG House,
Stuart Road, Bredbury, Stockport, SK6 2SR
Tel : 0161 494 6801, Fax : 0870 123 1542

CENTURYWISE FINA 2 MINOR ABRASIVE CONTROL VALVE

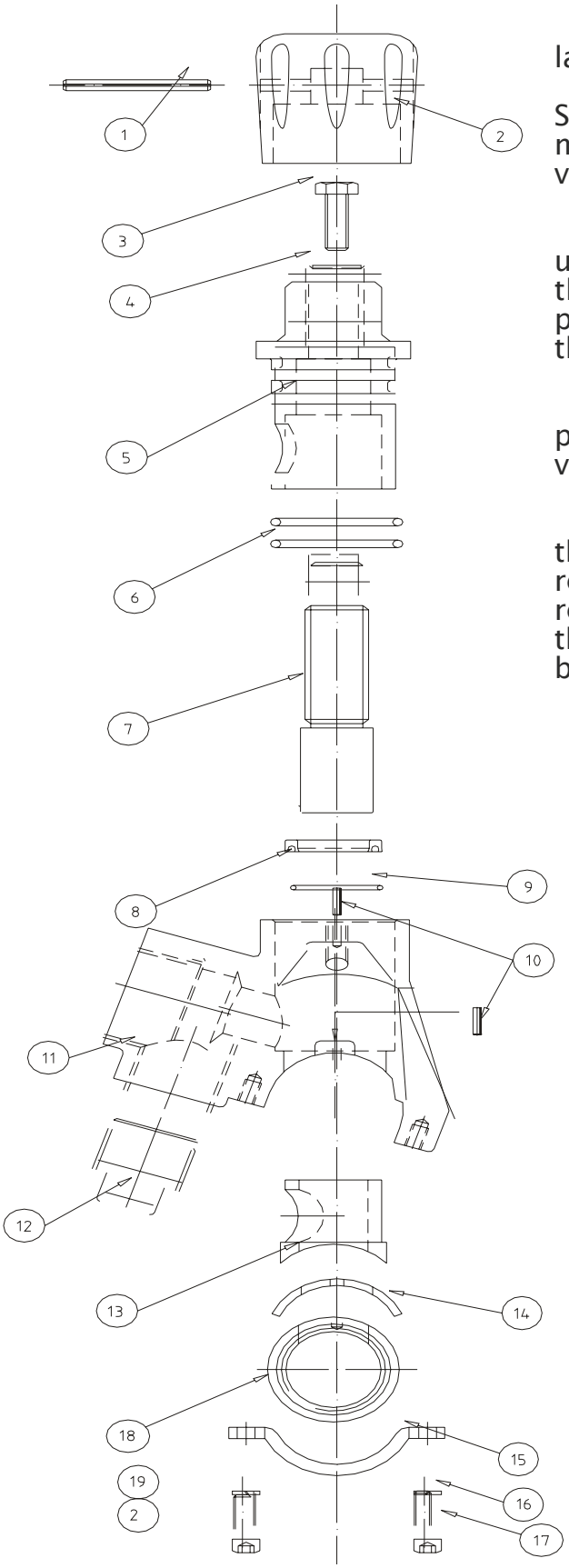

The Minor abrasive control valve is the very latest generation in the Fina Valve Series.

Developed from the original Fina Valve, the Series II Fina Valve has several new features which make it one of the most efficient and effective abrasive valves available today.

The pipe nipple mounting system has been upgraded to eliminate locating the mounting holes in the nipple itself. This greatly reduces the risk of premature internal wear occurring at the point where the mounting bolts attach to the nipple.

A large drain plug has also been added to provide much easier clearing of blockages within the valve itself.

Servicing and maintenance is also simplified, as the entire control knob and plunger assembly can be removed from the valve body without the need to remove the valve from the blast pot. This allows both the plunger, urethane sleeve and the plunger seals to be changed quickly and easily.

No.	Description
1	Spring pin : 5mm diam.
2	Control knob
3	Machine screw : 5/16 UNC
4	Flat washer : 8mm
5	Valve top body
6	O ring : 38.7mm
7	Valve plunger
8	Valve plunger seal
9	O ring : 28mm
10	Split pin : 3mm x12mm
11	Main valve body
12	Plug : 1" BSP
13	Urethane sleeve
14	Polyurethane gasket
15	Half ring clamp
16	Spring washer 1/4"
17	Socket head mach. screw
18	Pipe nipple 1.1/4" x 1.1/4"

Centurywise Ltd., Unit 2, HNG House,
Stuart Road, Bredbury, Stockport, SK6 2SR
Tel : 0161 494 6801, Fax : 0870 123 1542